ALPFPS Double Male Elbow

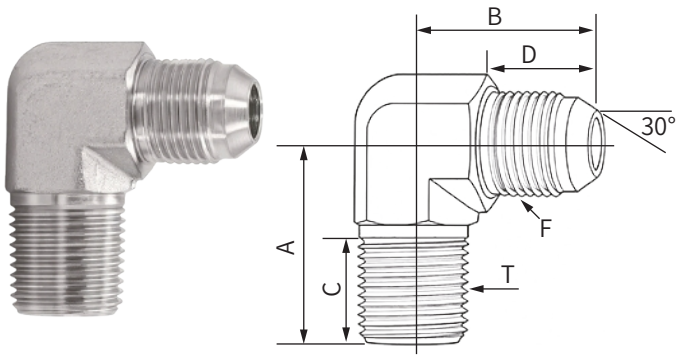

Model	T	F	A	B	C	D
ALPFPS11F	R1/8	G1/8	21	20	14	13
ALPFPS12F	R1/8	G1/4	22	24	14	16
ALPFPS21F	R1/4	G1/8	22	21	15	13
ALPFPS22F	R1/4	G1/4	25	24	17	16
ALPFPS23F	R1/4	G3/8	27	27	17	17
ALPFPS32F	R3/8	G1/4	30	26	20	16
ALPFPS33F	R3/8	G3/8	30	27	20	17
ALPFPS34F	R3/8	G1/2	32	32	20	20
ALPFPS44F	R1/2	G1/2	36	32	24	20
ALPFPS46F	R1/2	G3/4	38	36	24	22
ALPFPS64F	R3/4	G1/2	42	34	28	20
ALPFPS66F	R3/4	G3/4	43	37	28	22

Applicable Fluids: Oil, Water; Max. Operating Pressure: 20.6MPa

S35C is a standard material, and adding a "V" after the model indicates that it is made of SUS304.

APFS Double Male Straight Adapter

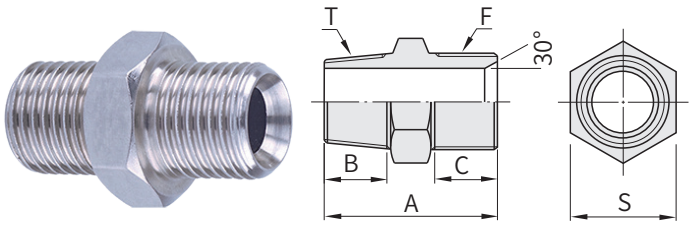

Model	T	F	A	B	C	S
APFS11F	R1/8	G1/8	27	10	11	14
APFS12F	R1/8	G1/4	32	10	13	19
APFS13F	R1/8	G3/8	34	10	15	22
APFS21F	R1/4	G1/8	32	13	11	14
APFS22F	R1/4	G1/4	34	13	13	19
APFS23F	R1/4	G3/8	36	13	15	22
APFS31F	R3/8	G1/8	34	15	11	14
APFS32F	R3/8	G1/4	36	15	13	19
APFS33F	R3/8	G3/8	38	15	15	22
APFS34F	R3/8	G1/2	42	15	17	27
APFS44F	R1/2	G1/2	47	18	18	27
APFS46F	R1/2	G3/4	50	18	20	32
APFS64F	R3/4	G1/2	47	20	17	27
APFS66F	R3/4	G3/4	53	20	20	36

Material：SUS304; Applicable Fluids: Oil, Water; Max. Operating Pressure: 20.6MPa

35C is a standard material, and adding a "V" after the model indicates that it is made of SUS304.